7.3L Engine Control Pack Installation Instructions

NO PART OF THIS DOCUMENT MAY BE REPRODUCED WITHOUT PRIOR AGREEMENT AND WRITTEN PERMISSION OF FORD PERFORMANCE PARTS © Ford Motor Company 2020

For questions, Call the FORD PERFORMANCE Techline 1-800-367-3788

Please visit https://www.performanceparts.ford.com for warranty information

TABLE OF CONTENTS

Section	Topic	Page
1.0	Introduction	2
2.0	Overview	2
3.0	Included Components	2-5
4.0	Pre-Installation of Harness and Parts	6
5.0	Controls Pack Harness Installation Instructions	7-12
6.0	Ford Performance Power Distribution Box Installation	12
7.0	Fuel System	13
8.0	Wire Usage Schematics	14-16
9.0	Fuses & Relays	17
10.0	Troubleshooting Tips	17
11.0	Connector Faces	18-20
12.0	CAN Message Definition	21
13.0	Wiring Schematics (control pack, starter system, PCM pinout)	22-25

Ford Factory Shop Manual purchase options www.motorcraftservice.com

NO PART OF THIS DOCUMENT MAY BE REPRODUCED WITHOUT PRIOR AGREEMENT AND WRITTEN PERMISSION OF FORD PERFORMANCE PARTS © Ford Motor Company 2020

1.0 Introduction

This kit was developed by Ford Performance in order to allow performance enthusiasts the ability to install and run a 7.3L Crate Engine (Ford Performance P/N: M-6007-73) into any Vehicle. The automatic kit is designed to work with a Ford 10R140 transmission. Other transmissions are not supported.

Note: Cruise control is not available with this system. GPS or drive shaft speed sensors signals are suggested for vehicle speed.

2.0 Overview

This booklet provides a step by step guide for the preparation and assembly of the control pack. Please read the instructions thoroughly before starting the installation. If you have any questions, contact the Ford Performance Techline at (800) 367-3788.

3.0 Included Components

Below is a Bill of Materials included in this kit followed by detailed notes

Part #	Description
CM-12A650-AANP	2020 7.3L AUTOMATIC PCM WITH CALIBRATION
CM-14A006-A73	2020 7.3L AUTOMATIC CONTROL PACK MAIN HARNESS
CM-14A006-A73T	2020 7.3L AUTOMATIC TRANS HARNESS
CM-9474-M5087	ADAPTER GT350 TB TO GT INTAKE
CM-9600-M8B	COLD AIR INTAKE
FR3Z-12A647-B	AMBIENT AIR TEMPERATURE SENSOR
GR3Z-9E936-A	GASKET - THROTTLE BODY
HC3Z-9F836-A	ACCELERATOR PEDAL
JX6Z-12B579-A	MAF SENSOR
KR3Z-6758-A	CRANKCASE VENTILATION TUBE
KR3Z-9E926-A	THROTTLE BODY
LC3Z-9F472-F	UEGO UPSTREAM O2 SENSOR
PC-3001	PACKAGING CARTON
W500103-S437	BOLT THROTTLE BODY

3.1 Powertrain Control Module (PCM)

- The PCM is the central processing unit for engine operation. Input data/engine operation feedback is provided from each of the engine's sensors connected to the PCM via wiring leads. This input data is used to perform calculations that in turn adjust fuel quantity and spark timing according to varying driver demand (ie – accelerator pedal input).
- The PCM in this Controls Pack has a custom software and calibration dataset which were specifically developed by Ford Performance engineers to provide peak performance and reliability with the 7.3L Crate Engine (Ford Performance P/N: M-6007-73).

Ford Factory Shop Manual purchase options www.motorcraftservice.com

NO PART OF THIS DOCUMENT MAY BE REPRODUCED WITHOUT PRIOR AGREEMENT AND WRITTEN PERMISSION OF FORD PERFORMANCE PARTS © Ford Motor Company 2020

- The PCM supports CAN messages for engine speed, fuel pressure, coolant temperature, oil temperature, oil pressure, battery voltage, manifold vacuum, and gear. (see section 12 for details)

PCM Calibration Application Notes:

- The calibration provided in this PCM works with a mechanically regulated return style fuel system. See Section 7 of this manual for more information on fuel system requirements for this PCM.
- The air filter assembly with integral mass air flow sensor included with this kit must be used to achieve acceptable engine performance. Refer to Section 3.9 for more information about air inlet system requirements.

NOTE: Due to the fuel system requirement described above, installation of this PCM in ANY production vehicle will result in a no-start condition!

3.2 Control Pack Wiring Harness

- The control pack wiring harness has pre-determined lengths that will dictate the location of certain supporting components as well as the locations of fixed components on the drive train.

3.3 Accelerator Pedal Position Sensor (APPS)

- The accelerator pedal assembly includes a pair of integrated pedal position sensors (APPS1/APPS2). This pedal has electrical properties designed specifically for correct interface with PCM and is required for proper engine operation.

3.4 Fuel Supply System (Not All Components are Included)

- See section "7.0 Fuel System" of this manual for fuel pump and regulator requirements.

3.5 O2 Sensors

- One O2 sensor per cylinder bank (1 upstream) provide wide range feedback to the PCM for closed loop air fuel ratio control by measuring the quantity of oxygen present in exhaust leaving the combustion chamber.
- Tighten to 48 Nm (35 lb-ft).

NOTE: Do not splice, lengthen or otherwise modify the sensor wiring. Doing so will adversely affect the sensor performance and reliability of the signal. You may lengthen the connector leads from the harness side if necessary, by splicing, soldering and shrink wrapping the splices. The engine harness and controls package is designed to operate with the O2 sensors in the model year 2020 F-250 stock locations.

NO PART OF THIS DOCUMENT MAY BE REPRODUCED WITHOUT PRIOR AGREEMENT AND WRITTEN PERMISSION OF FORD PERFORMANCE PARTS © Ford Motor Company 2020

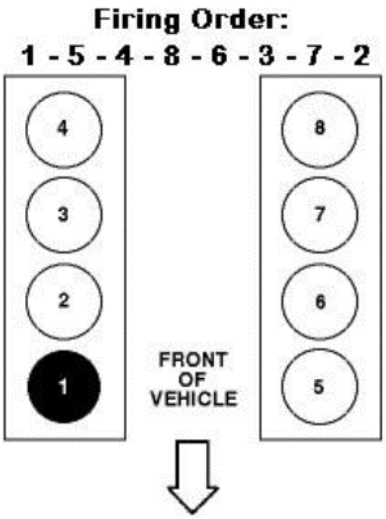

3.8 Plastic Bag of Assorted Items

- Inline fuse.
- Fuse holder.
- 6-way IP pigtail.
- Misc. hardware.

NO PART OF THIS DOCUMENT MAY BE REPRODUCED WITHOUT PRIOR AGREEMENT AND WRITTEN PERMISSION OF
FORD PERFORMANCE PARTS © Ford Motor Company 2020

3.9 Air Cleaner Assembly with Integral Mass Air Flow Sensor

- A performance induction is included in the kit.
  - Throttle body and adapter plate.
    NOTE: The passenger side ETB (electronic throttle body) locating pin needs to be removed from the intake manifold before adapter plate can be installed. To assure no debris contaminates the intake manifold, gaffer tape should be used to seal off the intake manifold at the throttle body flange.
    Using a die grinder or a pair of side cutters, the passenger side plastic locating pin needs to be cut off flush. A file can be used to make a flush surface if the cut is not flat.
  - Induction tube with integrated MAF sensor.
  - Air filter.
  - Air Filter enclosure.
- You must replace the original throttle body that is installed on the engine (as shipped), with the unit included in the kit for proper operation.
- The installation of the air filter enclosure is optional and may be modified.

NO PART OF THIS DOCUMENT MAY BE REPRODUCED WITHOUT PRIOR AGREEMENT AND WRITTEN PERMISSION OF FORD PERFORMANCE PARTS © Ford Motor Company 2020

3.10 Ambient Air Temperature (AAT)

- The AAT must be installed in the vehicle forward of the radiator or other heat exchangers.
- The installation location must be in the flow of fresh air to provide optimum performance as it effects the calculation of the delivered spark and fuel.

3.11 Controls Pack Wiring Assembly

- Connects to vehicle battery and inline connector on engine harness.
- Contains Ford Performance Power Distribution Box (FPPDB) and high power inline fuse.
- Electrical connections to Accelerator Pedal (APPS) and Clutch Switch (CBT).
- Wire leads for Ignition Switch & Starter.
- Data Link Connector for reading Diagnostic Trouble Codes (DTCs).
- Check Engine/Malfunction Indicator Lamp (MIL) for visual indication of engine control system fault code presence.
- MIL will stay illuminated when the ignition is ON and the engine is NOT running; therefore this condition does not indicate a system fault; Not all DTCs will cause the MIL to illuminate.
- only the MIL included in this kit will illuminate if a fault exists.

4.0 Pre-Installation of Harnesses and Parts

The following is a list of key factors to consider before any of the installation takes place:

- PCM mounting location is limited by the length of the PCM lead of the engine harness (located on the right front corner of the engine). The PCM connector lead measures 22 inches from the lower edge of the right valve cover. This will dictate the location of where the PCM will need to be mounted.
- Ford Performance Power Distribution Box must be mounted, in the engine compartment, within 60 inches of the vehicle battery or positive battery post if you have a trunk mounted battery as dictated by the battery positive and ground lead lengths of the controls pack wiring harness.
- Lay out the harness and components first in order to ensure that the wiring leads will reach everywhere you intend them to. This is a good check before you drill any holes or mount any components!

Ford Factory Shop Manual purchase options www.motorcraftservice.com

NO PART OF THIS DOCUMENT MAY BE REPRODUCED WITHOUT PRIOR AGREEMENT AND WRITTEN PERMISSION OF FORD PERFORMANCE PARTS © Ford Motor Company 2020

Suggested Battery Cable Diagram

Connect the Battery positive to the starter and alternator.

Ground the engine to the chassis.

NOTE: Pay close attention to the vehicle grounds. Many times, electrical Issues can be traced back to insufficient ground circuits. Ensuring your vehicle is well grounded now, will save you time and frustration later.

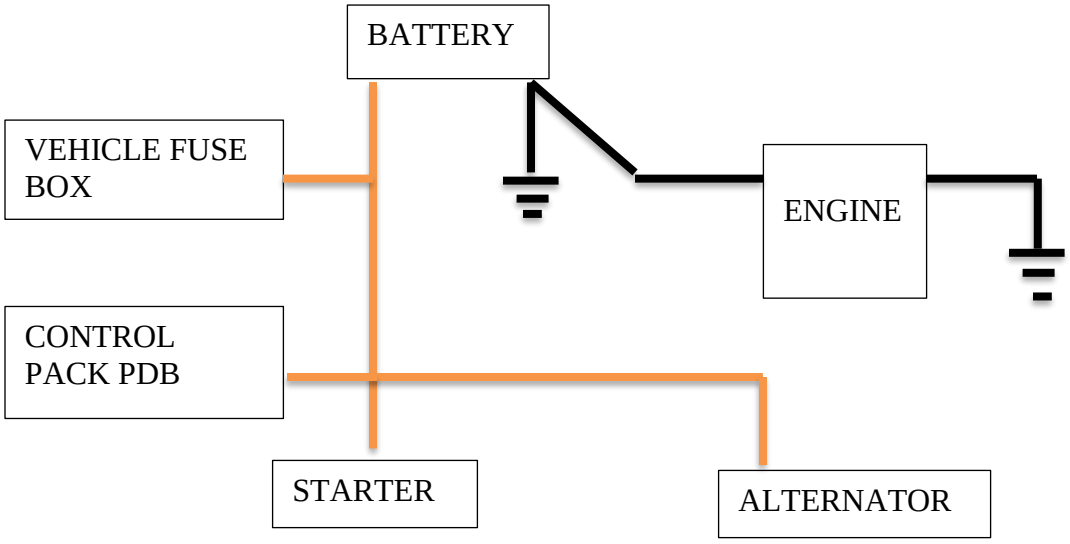

NO PART OF THIS DOCUMENT MAY BE REPRODUCED WITHOUT PRIOR AGREEMENT AND WRITTEN PERMISSION OF FORD PERFORMANCE PARTS © Ford Motor Company 2020

5.0 Control Pack Harness Installation Instructions

Item	Connector #	Description		Item	Connector #	Description
A	-	Ford Performance Power Distribution Box		O	C132	Ambient Air Temperature Sensor
B	-	Ground		P	C400	Intercooler Pump
C	C160A	Inline to IP Pigtail		Q	C90	PCM Trans connector
D	C2040	Accelerator Pedal Position Sensor		R	C1A	Inline to Controls Pack Harness
E				S	C1571	O2 sensor Upstream-RH
F	C251	Data Link Connector & MIL		T	C1572	O2 sensor Upstream-LH
G	-	Optional EPAS connection		U	C141	Not used
H	-	Starter Solenoid		V	C142	Not Used
I	-	Cooling Fan Feed		W	C168A	Automatic transmission Bulkhead (auto only)
J	C146	Auxiliary Inline to Engine		X	C8	Aux Module (not used)
K	C1B	Inline to Trans Harness		-	-	-
L	C175B	PCM vehicle connector		-	-	-
M	C128	Mass Air Flow Sensor		-	-	-
N	C102A	Alternator		-	-	-

Table 1 – Summary of Controls Pack Connectors

NO PART OF THIS DOCUMENT MAY BE REPRODUCED WITHOUT PRIOR AGREEMENT AND WRITTEN PERMISSION OF FORD PERFORMANCE PARTS © Ford Motor Company 2020

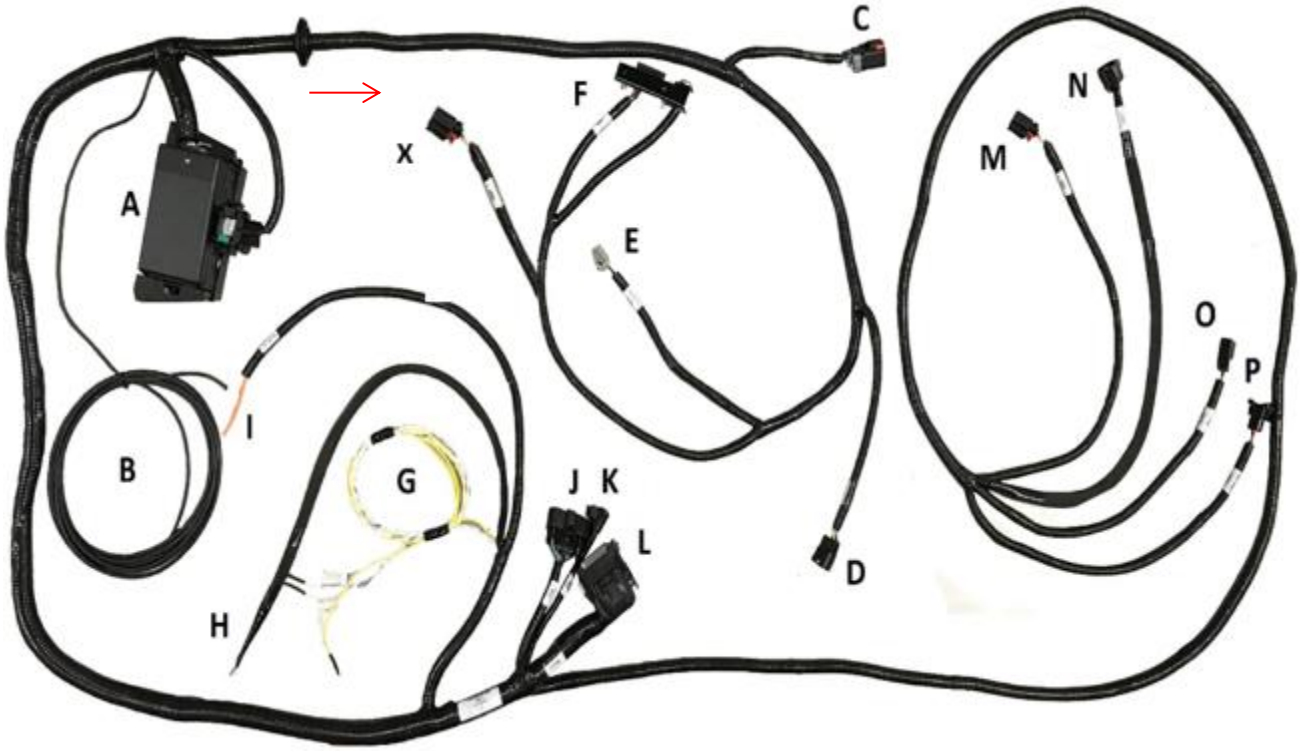

Figure 1a - 2020 7.3L AUTOMATIC CONTROL PACK MAIN HARNESS

Figure 1b – 2020 7.3L AUTOMATIC TRANS HARNESS

NO PART OF THIS DOCUMENT MAY BE REPRODUCED WITHOUT PRIOR AGREEMENT AND WRITTEN PERMISSION OF FORD PERFORMANCE PARTS © Ford Motor Company 2020

5.1 Controls Pack Harness Installation Instructions

NOTE: To avoid electrical shock and/or damage to sensitive electrical control system components, before beginning any work, remove the vehicle's negative battery terminal and place a rag or towel between it and the battery negative post. **The negative battery terminal is not to be reinstalled until the last step of installation.**

1. Identify proper mounting location for the PCM, Power Distribution Box (Item A) & inline fuse holder. Locate the PCM connector (Item L) on the engine harness and start there.
2. Plug the PCM vehicle connector (item L), from the controls pack harness and the PCM trans connector (item Q) from the transmission harness into the PCM; once plugged-in, use a zip-tie to tie the bundle of wires exiting each connector back together. Route the transmission harness so that all upstream O2 sensor connectors (items S and T) are able to reach their corresponding sensors. Connect the O2 sensors. In the steps that follow, we will be repeating this process of using zip-ties to piggy-back/tie the harness to the existing engine harness approximately every 200 mm along the engine harness.
3. Connect the in-line connector (item J) from the controls pack harness to the mating connector on the engine harness.
4. Connect alternator connector (item N), mass air flow (MAF) sensor connector (item M), ambient air temperature (AAT) sensor connector (item O) to their respective locations, being sure to avoid any pinch-points or exhaust hot-spots.
5. Connect blunt-cut orange 10 AWG cooling fan lead and starter lead eyelet (item H) to their respective locations.
6. The grommet needs to be properly installed in the firewall of your vehicle so as to protect the Controls Pack Harness routing that passes through to the passenger compartment. All connections previously mentioned are located under hood; all connections mentioned from this point on are located in the passenger compartment.
7. Identify proper mounting location for the accelerator pedal and ignition switch (purchased separately).
8. Identify mounting location for the bracket with OBDII connector and Malfunction Indicator Light.
9. Connect the ground eyelet (item B) to a reliable ground point on the chassis or engine block, away from dirt and water.
10. Route the IP pigtail (item C) to approximately the base of the steering wheel to be connected later.
11. Connect the APPS connector (item D) to the accelerator pedal.
12. Locate the 6-way I/P Pigtail connector with blunt leads (item C) and continue to Section 6.

* Removal Procedures for Unused Connectors:
If 100% sure connector is not currently needed and will not be needed in the future, cut routing leading-up to unused connector and individually heat shrink each wire herein. To ensure that the wires are completely isolated from one another and the outside environment, you may also want to wrap the heat-shrinked wire in electrical tape to provide an additional layer of protection from moisture and dirt.

NO PART OF THIS DOCUMENT MAY BE REPRODUCED WITHOUT PRIOR AGREEMENT AND WRITTEN PERMISSION OF FORD PERFORMANCE PARTS © Ford Motor Company 2020

5.2 6-way I/P Pigtail Connection Details (This is connector C160B which plugs into C160A previously mentioned, it is the connector with blunt leads coming from it)

The 6-way pigtail is to be connected according to the chart below. See also the diagrams on the following pages for illustrations of wire connection points, based on the ignition/starter switches that you intend to use. Setup A uses separate toggle switches for ignition and starter inputs, while Setup B uses an ignition cylinder with a key.

Cavity	Lead Label	Wire Color	Description
1	Fuel Pump Relay Out	GN	Provides +12V to the fuel pump
2	-	-	-
3	Starter Motor Request (SMR)	Light Blue	Apply +12V to send a request to the PCM to energize the starter solenoid
4	-	-	-
5	Ignition Relay Trigger	Light Green	Apply +12V to energize the ignition relay/wake-up the system
6	-	-	-

Locate each of the blunt leads. This is where you will need to make all of the soldered connections for the harness. Before soldering any wires, however, you must first decide which set-up you will pursue by referencing Set-up A and Set-up B on pages 15 and 16.

Connect the following REQUIRED blunt leads as follows:

Blunt Lead 1 – Fuel Pump Relay Out (Dark Green): Connect to fuel pump positive. Separate ground for fuel pump must be provided. Note the fuel pump will start running any time key is on, then if you don't start the engine, the computer will turn it off after a couple of seconds.

NO PART OF THIS DOCUMENT MAY BE REPRODUCED WITHOUT PRIOR AGREEMENT AND WRITTEN PERMISSION OF FORD PERFORMANCE PARTS © Ford Motor Company 2020

Blunt Lead 3 – Starter Motor Request (Light Blue):

Set-up A:

Connect to input node of starter momentary switch so that 12 volts is provided when engine starting is requested.*

Set-up B:

Connect to 'Start' output node of ignition cylinder so that 12 volts is provided when engine starting is requested.*

Blunt Lead 5 – Ignition Relay Trigger (Light Green):

Set-up A:

Connect this wire to the output side of the ignition toggle switch so that 12 volts is provided when the key is in the 'Start' (cranking) and 'Run' positions. It is imperative that this circuit be reliable, the PCM will interpret an intermittent voltage on this signal as a request to shut down the engine! (Hint, if your engine shuts down after a hard launch check here first).

Set-up B:

Connect to the 'Start/Run' output node of ignition cylinder so that 12 volts is provided when engine starting is requested. It is imperative that this circuit be reliable, the PCM will interpret an intermittent voltage on this signal as a request to shut down the engine! (Hint, if your engine shuts down after a hard launch check here first).

Once all of the blunt lead connections have been soldered onto their appropriate location, insert the 6-way I/P Pigtail connector into item C.

* **Important Note on the Starting System**

This kit includes connections and installation instructions for PCM controlled engine starting; however, it is not required that the customer utilize this option. Customers may choose to use their existing non-PCM controlled starting system if desired. If non-PCM controlled starting is used, unused blunt leads should be cut to approximately 2" length and sealed using heat shrink.

6.0 Ford Performance Power Distribution Box Installation

6.1 Before you start, you should have your two battery cables at hand (purchased separately, 4 AWG recommended), one from battery to fuse holder, the other one from fuse holder to FPPDB.

6.2 Carefully remove the nut and washers on both terminals of the in-line fuse holder and set aside.

6.3 Use one of your battery cables and place the eyelet onto one of the two in-line fuse holder terminals, then one of the washers, and then tighten down with one of the two nuts.

6.4 Locate the power terminal of the side of FPPDB, notice there is a battery positive blunt lead eyelet already attached to it. Attach the other eyelet to this power terminal by tightening the nut down on top of the eyelet. The order of installation on the power terminal should be a washer, the battery cable eyelet, then the blunt lead eyelet, another washer, and then the nut. Avoid sharp points and using zip-ties to secure the cable (approximately every 200 mm) along the way. DO NOT CONNECT ANYTHING TO THE BATTERY YET.

6.5 Place the Buss 250A fuse onto the fuse holder terminals.

6.6 On the opposite in-line fuse holder terminal, place one eyelet of your second battery cable, then the other remaining washer, and then tighten down with the remaining nut.

6.7 Close the cover of the in-line fuse holder.

6.8 Being careful not to inadvertently complete the circuit, connect the opposite end of the battery cable to the positive terminal of the vehicle battery.

NO PART OF THIS DOCUMENT MAY BE REPRODUCED WITHOUT PRIOR AGREEMENT AND WRITTEN PERMISSION OF FORD PERFORMANCE PARTS © Ford Motor Company 2020

6.9 Attach the ground blunt lead to the negative battery terminal (you will need to provide the eyelet). Verify that you have a good (dry and clean) ground path from the battery negative post to the chassis ground. In general, the resistance from the battery ground to this chassis location should be less than 0.1 ohm.

7.0 Fuel System

The PCM is calibrated for a return style fuel system as shown below.
- Use only AN type fuel fitting to interface with OEM fuel rail.
- Fuel pump must be capable of 160 liters per hour flow at 75 psi.

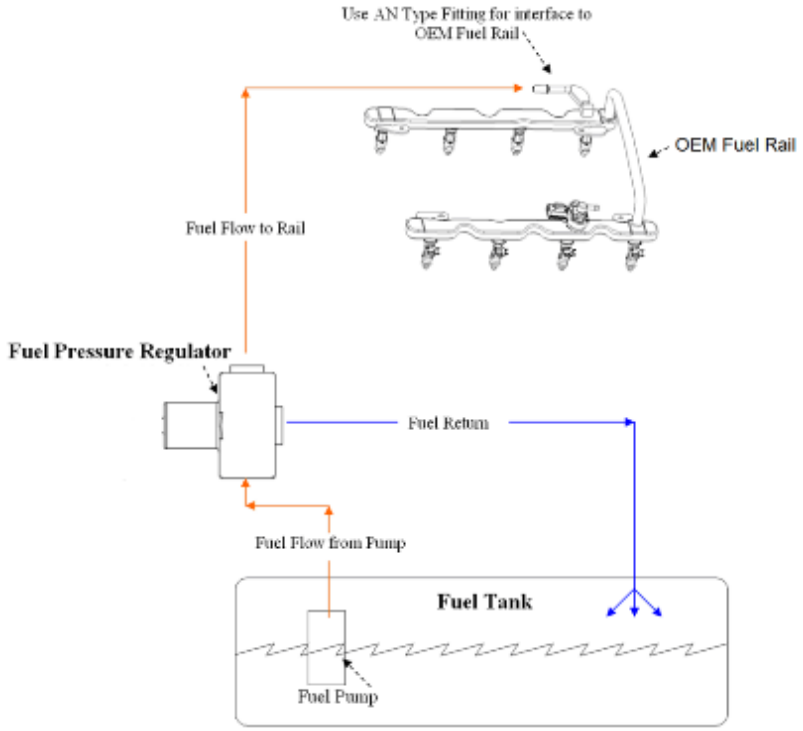

Fuel pump requirements: 160L/Hr minimum at 75psi

Fuel pump location
A common and often overlooked problem is the location of the fuel pump or pumps. Optimally, the fuel pump should be mounted IN THE TANK to reduce the possibility of pump cavitation. Cavitation is essentially localized boiling caused by a reduction in pressure, generally occurring on the inlet side of a pump. This localized boiling results in fuel vapor bubbles which will reduce the volume of fuel the pump is capable of delivering to the engine. Any reduction in pressure or increase in temperature at the inlet side of the pump increases the chances that cavitation will occur. For this reason, it is always best to either have the pump inside the tank immersed in fuel or (in the case of an external pump) gravity fed, which will increase the pressure on the inlet side of the pump. If the fuel pump has to "pull" the fuel, this will result in a reduction in pressure at the fuel pump inlet potentially allowing cavitation and, thus, vapor bubbles to develop. These vapor bubbles are then drawn into the fuel pump and exit the high-pressure side of the fuel pump as compressed vapor. They travel the entire length of the fuel system and are expelled through the fuel injector. This can cause issues

NO PART OF THIS DOCUMENT MAY BE REPRODUCED WITHOUT PRIOR AGREEMENT AND WRITTEN PERMISSION OF
FORD PERFORMANCE PARTS © Ford Motor Company 2020

ranging from stumbles and hesitations to engine damage due to insufficient fuel delivery and lean A/F ratios. Sometimes this problem can characterize itself by only appearing when the weather gets warmer, which can confound the diagnosis of the issue. In certain cases, it may seem to only develop when driving on certain surfaces, because pavement reflects more heat than an off-road 4x4 trail. Remember, more heat and lower pressure on the inlet side of the pump means a greater chance of cavitation, which is to be avoided whenever possible.

If you are using an external mounted fuel pump, you should run a very coarse (typically around 100 micron) filter on the inlet side of the fuel pump, and a finer (typically around 10 micron) filter on the outlet side of the pump. A paper filter is NOT recommended on the inlet of the fuel pump because it can cause a restriction in fuel flow which, as mentioned previously, can lead to cavitation.

Warning: It is highly recommended that an inertia switch is incorporated into the fuel pump wiring to turn off the fuel pump in event of an accident.

8.0 Wire Usage Schematics

The following two pages detail the two most common wiring configurations—please choose one to complete installation of your controls pack kit. You will need to provide a 12V Hot At All Time wire yourself.

NO PART OF THIS DOCUMENT MAY BE REPRODUCED WITHOUT PRIOR AGREEMENT AND WRITTEN PERMISSION OF FORD PERFORMANCE PARTS © Ford Motor Company 2020

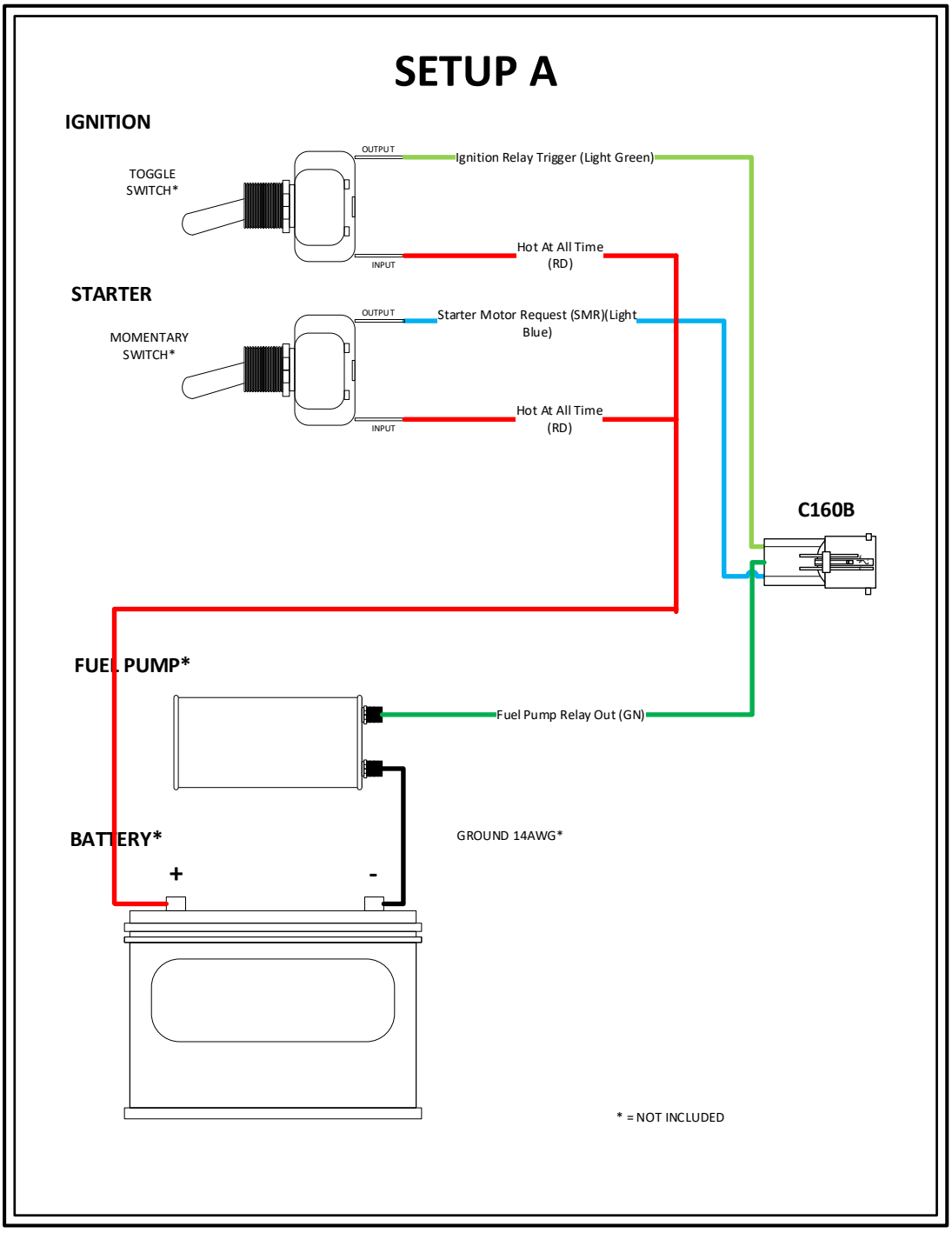

NO PART OF THIS DOCUMENT MAY BE REPRODUCED WITHOUT PRIOR AGREEMENT AND WRITTEN PERMISSION OF FORD PERFORMANCE PARTS © Ford Motor Company 2020

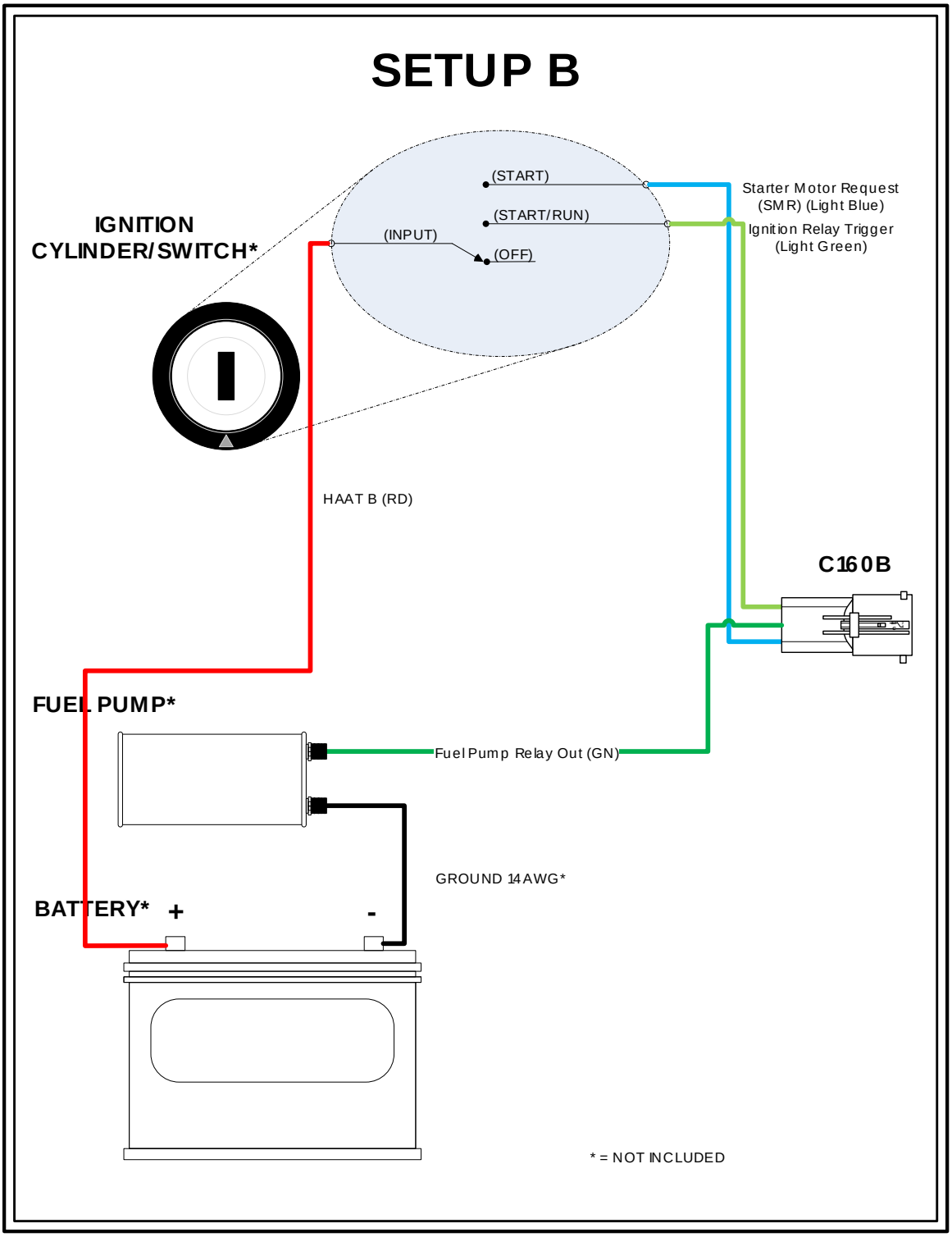

NO PART OF THIS DOCUMENT MAY BE REPRODUCED WITHOUT PRIOR AGREEMENT AND WRITTEN PERMISSION OF FORD PERFORMANCE PARTS © Ford Motor Company 2020

9.0 Fuses & Relays

- This diagram outlines the fuses and relays included in the controls pack wiring harness, and the function of each.
- NOTE: Do NOT replace any of the fuses with a higher value than those specified below.

ID: PDB
Name: Component ID/Values

Component ID	Type	Value	Name
JC1	J-Case Fuse	50A	PCM Relay Feed
JC2	J-Case Fuse	50A	Cooling Fan Relay Feed
JC3	J-Case Fuse	30A	Starter Relay Feed
JC4	J-Case Fuse	40A	Fuel Pump Relay Feed
JC5	J-Case Fuse	40A	Ignition Relay Feed
-	-	-	-
JC7	J-Case Fuse	NOT USED	NOT USED
JC8	J-Case Fuse	NOT USED	NOT USED
F1	Minifuse	20A	VPWR1
F2	Minifuse	20A	VPWR2
F3	Minifuse	15A	VPWR3
F4	Minifuse	15A	VPWR4
F5	Minifuse	10A	Ignition Switched A
F6	Minifuse	10A	Ignition Switched B
F7	Minifuse	15A	ICP
F8	Minifuse	15A	Ignitiond Switched C
F9	Minifuse	15A	VPWR6
F10	Minifuse	10A	HAAT A
F11	Minifuse	10A	HAAT B
-	-	-	-
R1	Power Mini Relay	70A	PCM Relay
R2	Power Mini Relay	70A	Cooling Fan Relay
R3	High Current Micro Relay	40A	Starter Relay
R4	High Current Micro Relay	40A	Fuel Pump Relay
R6	High Current Micro Relay	40A	Ignition Relay

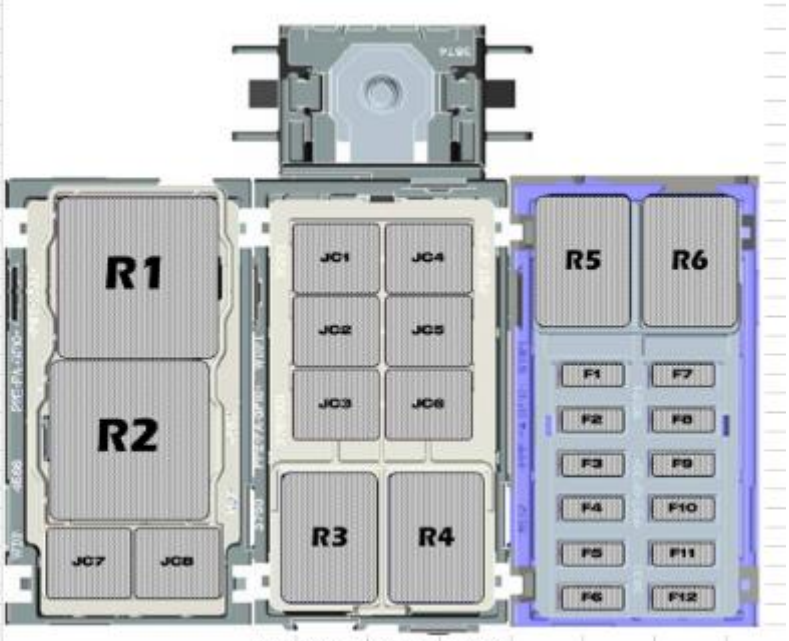

(Top View of PDB - Component ID)

10.0 Troubleshooting tips:

The following troubleshooting tips are intended for you to run a few quick tests to roughly determine what the issues are before calling the Ford Performance Techline or to find a solution yourself:

- Double check all the grounds. The wirings included in this kit is extremely sensitive to ground issues. Secure all the connections from the chassis grounds to the battery's negative post. Do a continuity test with your multimeter between all your ground terminals and battery ground.
- Check all reference voltages, confirm they are not shorted. Use a multimeter to measure the voltage at each sensor. It should read 5V.
- If none of the sensors or components have power, check the ignition switch, ignition relay R6, and PCM relay R1 wiring. It should have 12V at both relay outputs with the ignition on. This is fused via F5 and F1 separately. Use a multimeter to measure the voltage at F5 and F1, to confirm that it is12V. Use the small holes on the mini fuses to probe and measure voltage.
- If the sensor and relay measured voltages are correct, but the engine does not crank, check for the starter switch and starter relay R3 wiring. It should have 12V at the relay output when the ignition is in the crank position. Measure the voltage at the starter solenoid leads from harness (disconnect from starter). 12V is expected during cranking at these leads as well.
- If your engine only cranks, but does not fire, a fuel system malfunction could be the cause. First check that there is 12V at fuel pump +, and all injectors when the key is in the on position. Then, measure the pressure at the fuel rail, it should increase when the key is cycled to on.

NO PART OF THIS DOCUMENT MAY BE REPRODUCED WITHOUT PRIOR AGREEMENT AND WRITTEN PERMISSION OF FORD PERFORMANCE PARTS © Ford Motor Company 2020

11.0 Connector Faces

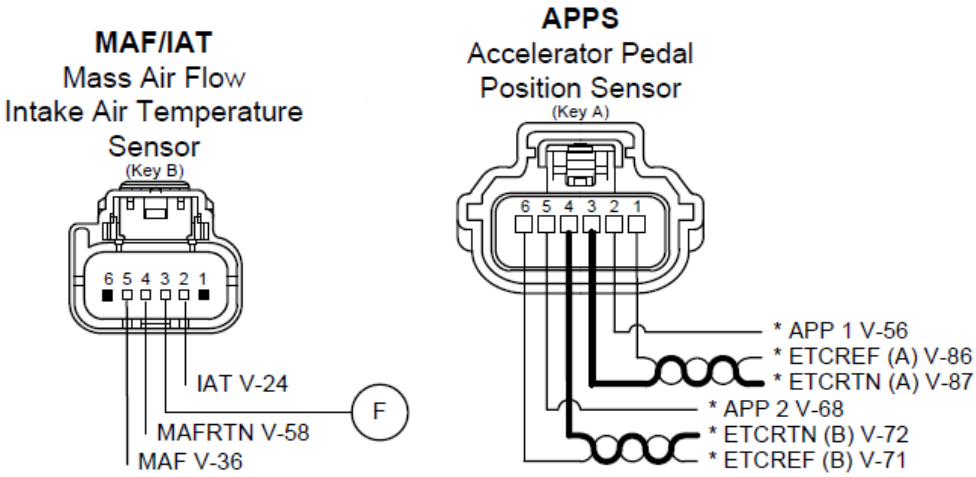

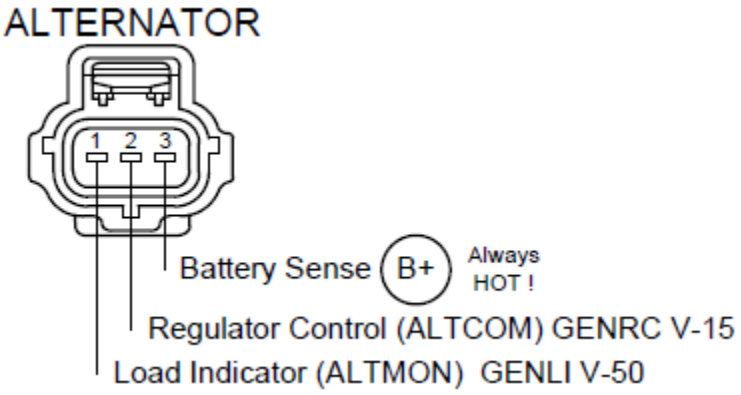

Intercooler Pump (used only with supercharger)

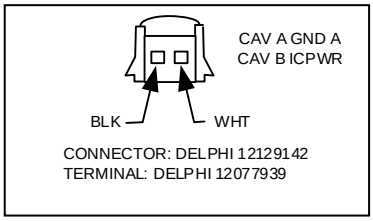

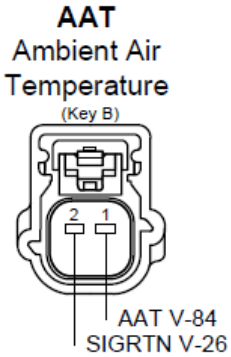

NO PART OF THIS DOCUMENT MAY BE REPRODUCED WITHOUT PRIOR AGREEMENT AND WRITTEN PERMISSION OF FORD PERFORMANCE PARTS © Ford Motor Company 2020

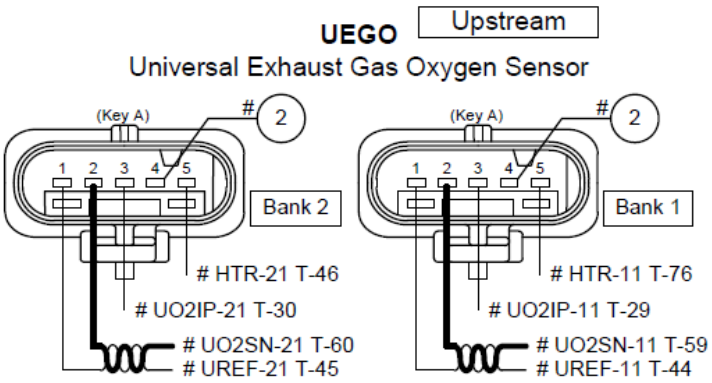

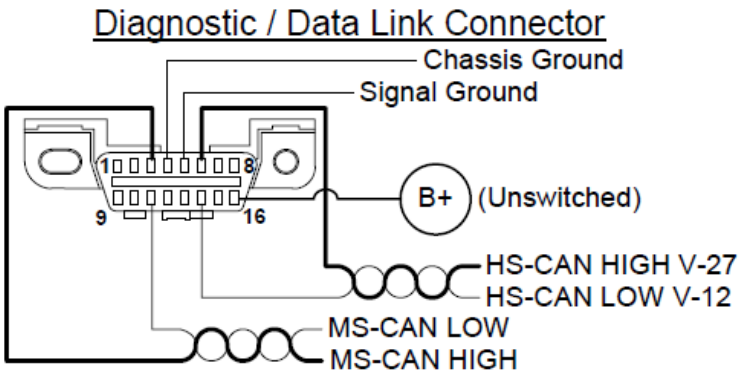

C160B inline to C160A

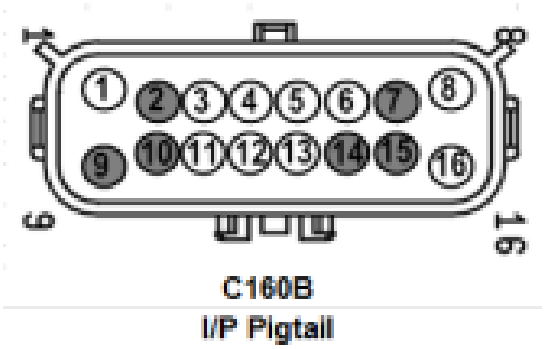

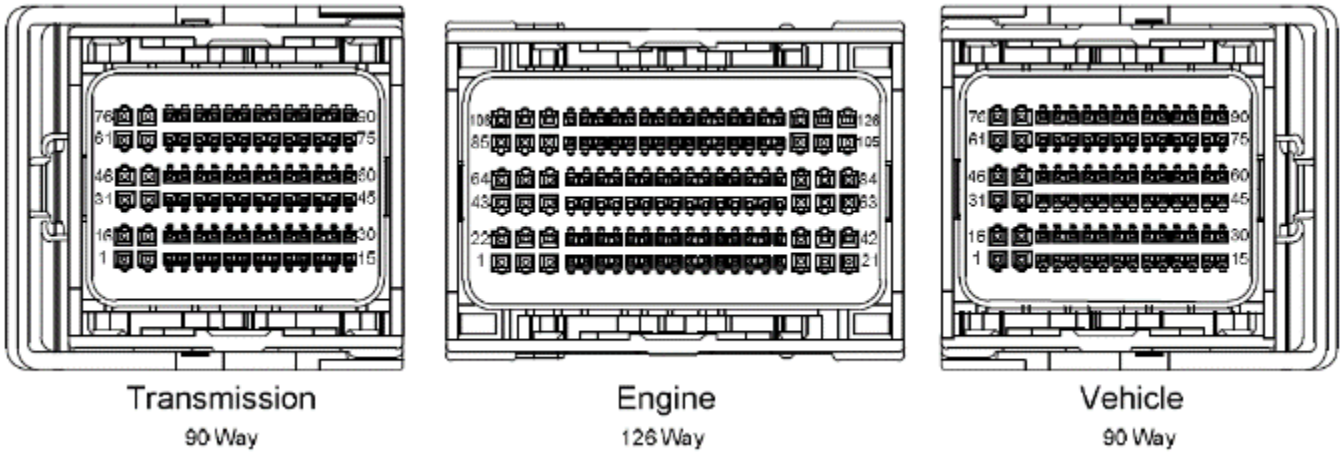

NO PART OF THIS DOCUMENT MAY BE REPRODUCED WITHOUT PRIOR AGREEMENT AND WRITTEN PERMISSION OF FORD PERFORMANCE PARTS © Ford Motor Company 2020

A10R140 Bulkhead

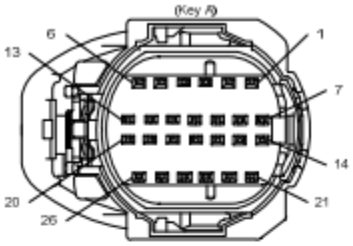

A10R140 (AT)		
Mechanical Park_B		
From Bulkhead Pin / Function		To PCM Cavity / Pin
1	TSS	T-38
2	ISS_A	T-37
3	ISS_B	T-54
4	OSS	T-51
5	TR-P1	T-36
6	TR-P2	T-55
7	VREF_A	T-50
8	VREF_B	T-35
9	TSPC_1	T-2
10	Run/Start	Run/Start Power PDJB
11	TSPC_2	T-1
12	RESERVED	
13	TFT	T-42
14	PC_1 (A)	T-19
15	PC_2 (B)	T-49
16	PC_3 (C)	T-34
17	PWRGND	Chassis Ground
18	RESERVED	
19	RESERVED	
20	TRGND	T-7
21	PC_4 (D)	T-64
22	PC_5 (E)	T-5
23	PC_6 (F)	T-4
24	PC_7 (LPC)	T-63
25	PC_8 (CPC)	T-79
26	RESERVED	

NO PART OF THIS DOCUMENT MAY BE REPRODUCED WITHOUT PRIOR AGREEMENT AND WRITTEN PERMISSION OF FORD PERFORMANCE PARTS © Ford Motor Company 2020

12.0 CAN Message Definition:

Parameter	PCM Units	Rate (ms)	Rate (Hz)	PCM->CAN Conversion	Range	Resolution	Num Bits	Offset	Notes
ENGINE_SPEED	RPM	10	100	None	0-16383	1	14	0	
ENGINE_SPEED_HZ	Hz	10	100	rpm/60*100	0-163.83	0.01	14	0	0-9829 RPM
AF0	A/F	10	100	((lambda * stoic_afr) - 7.0) * 100	7-27.47	0.01	11	7	Lambda converted to A/F based on Stoic A/F value
AF1	A/F	10	100	((lambda * stoic_afr) - 7.0) * 100	7-27.47	0.01	11	7	Lambda converted to A/F based on Stoic A/F value
Fuel_Pressure	Kpa	10	100	psi * 6.89476	0-511	1	9	0	Rail on PFI/Lift pump on DPFI
DI_Pressure	Kpa	10	100	psi * 6.89476	0-32768	1	15	0	Only on DI/DPFI engines
BOOST	Kpa	10	100	psi * 6.89476	0-511	1	9	0	Only On boosted engines, positive pressure only
VSPD	MPH	20	50	mph * 1.60934	0-409.5	0.1	12	0	
MAN_VAC	InHg	20	50	((InHg * 3.38639) + 105) * 10	-105-409.5	0.1	12	-105	Gauge pressure
ECT	degF	100	10	(degF - 32) * 5/9	-40-213	1	8	-40	214=degraded, 215=Faulted
EOT	degF	100	10	(degF - 32) * 5/9	-40-213	1	8	-40	214=degraded, 215=Faulted
EOP	Kpa	100	10		0-1023	1	10	0	
VBAT	volts	100	10	vbat * 100	0-20.47	0.01	11	0	
Codes_Count	-	100	10		0-255	1	8	0	
TOT	degF	100	10	(degF - 32) * 5/9	-40-213	1	8	-40	214=degraded, 215=Faulted
Gear	-	100	10		0-15	1	4	0	
Shifter_Position	-	100	10		0-15	1	4	0	

<table>
<tr><td></td><td></td><td></td><td></td><td colspan="64">Bit Number</td></tr>
<tr><td></td><td></td><td></td><td></td><td colspan="8">Byte 0</td><td colspan="8">Byte 1</td><td colspan="8">Byte 2</td><td colspan="8">Byte 3</td><td colspan="8">Byte 4</td><td colspan="8">Byte 5</td><td colspan="8">Byte 6</td><td colspan="8">Byte 7</td></tr>
<tr><td>Message ID</td><td>Transmitter</td><td>Rate (Hz)</td><td>Rate (ms)</td><td>0</td><td>1</td><td>2</td><td>3</td><td>4</td><td>5</td><td>6</td><td>7</td><td>8</td><td>9</td><td>10</td><td>11</td><td>12</td><td>13</td><td>14</td><td>15</td><td>16</td><td>17</td><td>18</td><td>19</td><td>20</td><td>21</td><td>22</td><td>23</td><td>24</td><td>25</td><td>26</td><td>27</td><td>28</td><td>29</td><td>30</td><td>31</td><td>32</td><td>33</td><td>34</td><td>35</td><td>36</td><td>37</td><td>38</td><td>39</td><td>40</td><td>41</td><td>42</td><td>43</td><td>44</td><td>45</td><td>46</td><td>47</td><td>48</td><td>49</td><td>50</td><td>51</td><td>52</td><td>53</td><td>54</td><td>55</td><td>56</td><td>57</td><td>58</td><td>59</td><td>60</td><td>61</td><td>62</td><td>63</td></tr>
<tr><td>0x270</td><td>PCM</td><td>100</td><td>10</td><td colspan="2">Res</td><td colspan="14">ENGINE_SPEED</td><td colspan="1">R</td><td colspan="15">ENGINE_SPEED_HZ</td><td colspan="4"></td><td colspan="12">MAN_VAC</td><td colspan="2">Res</td><td colspan="14">DI_PRESSURE</td></tr>
<tr><td>0x274</td><td>PCM</td><td>50</td><td>20</td><td colspan="12">Reserved</td><td colspan="9">BOOST</td><td colspan="11">AF0</td><td colspan="11">AF1</td><td colspan="9">Fuel_Pressure</td><td colspan="12">Reserved</td></tr>
<tr><td>0x275</td><td>PCM</td><td>50</td><td>20</td><td colspan="12">VSPD</td><td colspan="52">reserved</td></tr>
<tr><td>0x278</td><td>PCM</td><td>10</td><td>100</td><td colspan="8">ECT</td><td colspan="8">EOT</td><td colspan="8">TOT</td><td colspan="10">EOP</td><td colspan="2">Res</td><td colspan="4">Shifter_Position</td><td colspan="8">CODES_COUNT</td><td colspan="11">VBAT</td><td colspan="1">R</td><td colspan="4">Gear</td></tr>
</table>

NO PART OF THIS DOCUMENT MAY BE REPRODUCED WITHOUT PRIOR AGREEMENT AND WRITTEN PERMISSION OF FORD PERFORMANCE PARTS © Ford Motor Company 2020

13.0 Wiring Schematics (Control Pack, starter system, PCM pinout):

Control Pack Wiring:

Cowl Harness (control pack harness):

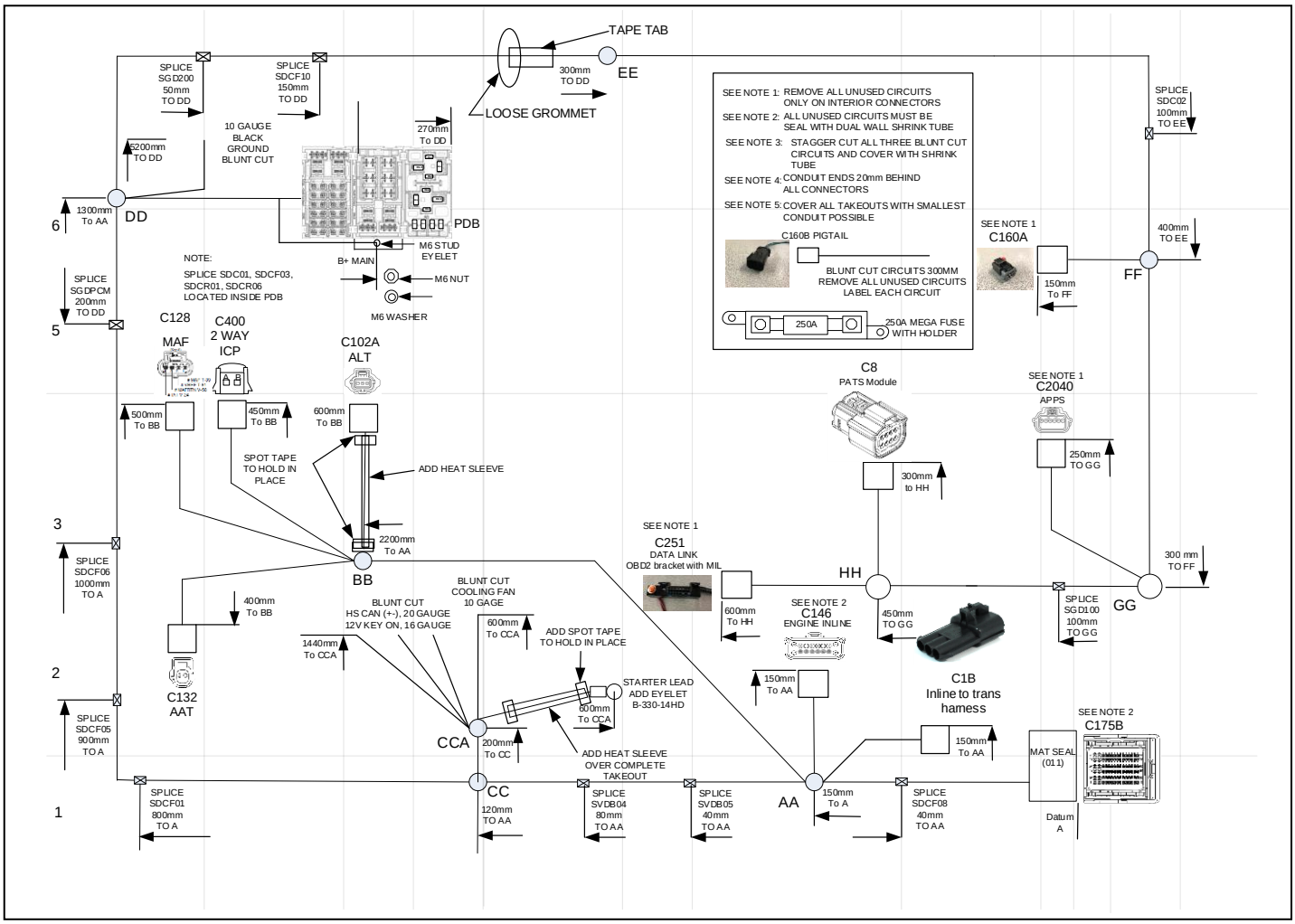

NO PART OF THIS DOCUMENT MAY BE REPRODUCED WITHOUT PRIOR AGREEMENT AND WRITTEN PERMISSION OF FORD PERFORMANCE PARTS © Ford Motor Company 2020

Automatic Transmission Harness

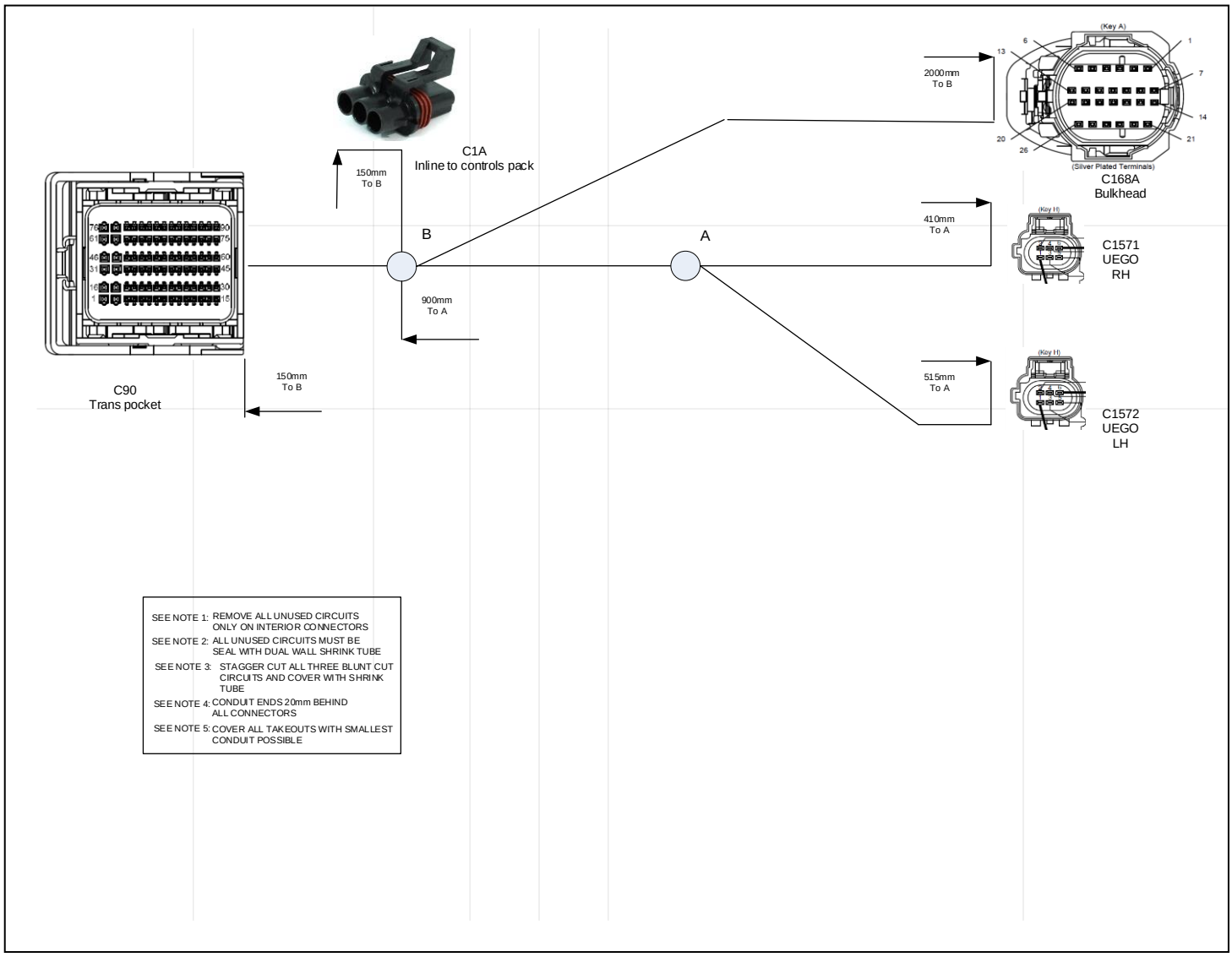

NO PART OF THIS DOCUMENT MAY BE REPRODUCED WITHOUT PRIOR AGREEMENT AND WRITTEN PERMISSION OF
FORD PERFORMANCE PARTS © Ford Motor Company 2020

Engine Starter system schematic:

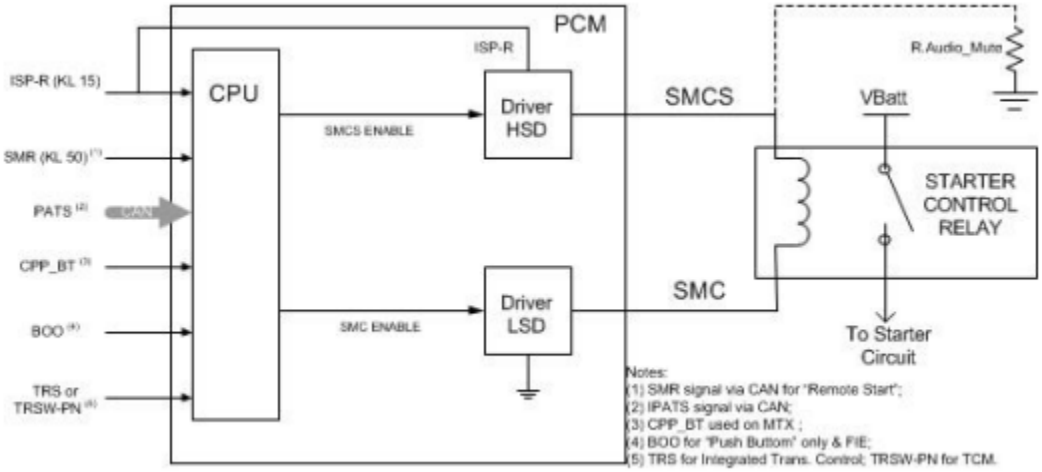

NO PART OF THIS DOCUMENT MAY BE REPRODUCED WITHOUT PRIOR AGREEMENT AND WRITTEN PERMISSION OF FORD PERFORMANCE PARTS © Ford Motor Company 2020

PCM Pinout:

	Transmission Pocket				
Pin	Function	Index	CDR Rev	Other	I/O
T1	TSPC	2	6.01		O
T2	TSPC	3	6.01		O
T3					
T4	PC (1-9)	51	1.06		O
T5	PC (1-9)	51	1.06		O
T6					
T7	TRGND		1.03		P
T8					
T9					
T10	HCSR(XY)	12	2.06		I
T11					
T12					
T13					
T14	UCSRA	11	1.04		B
T15	UCSRA	21	1.04		B
T16	HTR	HCSR(12)	1.09		O
T17					
T18					
T19	PC (1-9)	31	1.06		O
T20					
T21					
T22					
T23					
T24					
T25	SCP_SW		6.05		I
T26	HCSR(XY)	22	2.06		I
T27					
T28					
T29	UCSRP	31	1.03		B
T30	UCSRP	21	1.03		B
T31					
T32					
T33					
T34	PC (1-9)	31	1.06		O
T35	VREF	B	4.05		P
T36	TR-P	3	6.02		I
T37	ISS	A	6.01		I
T38	TRS		6.01		I
T39	MAF		7.01		I
T40					
T41					
T42	TFT		6.03		I
T43					
T44	UREF	31	1.03		O
T45	UREF	21	1.03		O
T46	HTR	21	3.03		O
T47					
T48					
T49	PC (1-9)	21	1.06		O
T50	VREF	A	4.05		P
T51	CSS		6.01		I
T52	ESS		6.02		I
T53	FMSS		1.06		I
T54	ISS	B	6.01		I
T55	TR-P	2	6.02		I
T56					
T57					
T58					
T59	UCSRN	31	1.03		O
T60	UCSRN	21	1.03		O
T61					
T62					
T63	PC (1-9)	72	1.06		O
T64	PC (1-9)	41	1.06		O
T65					
T66					
T67					
T68					
T69					
T70					
T71					
T72					
T73					
T74					
T75					
T76	HTR	11	3.03		O
T77	HTR	HCSR(12)	1.09		O
T78					
T79	PC (1-9)	82	1.06		O
T80	SIGRTN	DIG	1.03		P
T81	VREF	3	2.06		P
T82	VREF	2	2.06		P
T83					
T84	SIGRTN	HCSR(12)	1.03		P
T85	SIGRTN	HCSR(22)	1.03		P
T86					
T87					
T88					
T89					
T90					

	Engine Pocket				
Pin	Function	Index	CDR Rev	Other	I/O
E1					
E2					
E3					
E4	WOT (KS)	11	6.18		O
E5	SIGRTN	ANA	1.03		P
E6					
E7					
E8	CHT	2	3.03		I
E9	RSL	11-	5.02		I
E10					
E11					
E12	TPS		20.04		I
E13					
E14					
E15					
E16					
E17	PLI (1-10)	3F	1.11		O
E18	PLI (1-10)	8E	1.11		O
E19					
E20					
E21	COP (A-H)	1A	12.01		O
E22					
E23					
E24					
E25					
E26					
E27					
E28					
E29					
E30	RSL	11+	5.02		I
E31					
E32					
E33					
E34					
E35					
E36	PLI (1-10)	2H	1.11		O
E37					
E38	PLI (1-10)	5B	1.11		O
E39	PLI (1-10)	1A	1.11		O
E40					
E41					
E42	COP (A-H)	8E	12.01		O
E43					
E44					
E45					
E46	IVVAPCP_A		2.01		O
E47	SIGRTN	DIG	1.03		P
E48	PLIPWRM		2.07		I
E49					
E50					
E51	RSL	21+	5.02		I
E52					
E53	RSL	12+	5.02		I
E54					
E55					
E56					
E57					
E58	RSL	22+	5.02		I
E59					
E60					
E61					
E62	COP (A-H)	5B	12.01		O
E63	COP (A-H)	3F	12.01		O
E64					
E65					
E66					
E67					
E68					
E69	EOP		6.04		I
E70					
E71					
E72	RSL	21-	5.02		I
E73					
E74	RSL	12-	5.02		I
E75					
E76	CMP_H	11	6.11		I
E77					
E78	CKP_H		1.07		I
E79	RSL	22-	5.02		I
E80					
E81	PLI (1-10)	4C	1.11		O
E82					
E83	COP (A-H)	7D	12.01		O
E84	COP (A-H)	4C	12.01		O
E85	TACM (+-)	-	3.05		O
E86					
E87					
E88					
E89					
E90					
E91					
E92					
E93					
E94					
E95					
E96					
E97					
E98					
E99	SIGRTN	ANA	1.03		P
E100					
E101					
E102					
E103					
E104					
E105	COP (A-H)	8D	12.01		O
E106	TACM (+-)	+	3.05		O
E107					
E108					
E109	VOPC		4.02		O
E110	PLI (1-10)	8D	1.11		O
E111					
E112					
E113	SIGRTN	DIG	1.03		P
E114	LTCRTN	C	1.04		P
E115					
E116					
E117	LTCREF	G	2.03		P
E118	VREF	2	2.06		P
E119					
E120	VREF	1	2.06		P
E121					
E122					
E123	PLI (1-10)	7G	1.11		O
E124					
E125					
E126	COP (A-H)	2H	12.01		O

	Vehicle Pocket				
Pin	Function	Index	CDR Rev	Other	I/O
V1	VPWR		1.06		P
V2	VPWR		1.06		P
V3	FPC		2.06		O
V4	FC-V		2.06		O
V5					
V6					
V7	PCM_WAKE		6.02		I
V8	BOO		1.15		I
V9					
V10					
V11					
V12	CAN (+-)	HS-	2.01		C
V13	ISP-R		3.09		I
V14	FPRP		1.04		O
V15	GENPRC	1	1.13		O
V16	VPWR		1.06		P
V17					
V18	TRQ_N		6.03		O
V19	ACCR		1.07		O
V20	PTO_Request	2	3.05		I
V21	PTO_Request	1	3.05		I
V22	SMR		2.03		I
V23	BPR		3.06		I
V24	IAT	31	12.03		I
V25	PTO_RPM		3.06		I
V26	SIGRTN	ANA	1.03		P
V27	CAN (+-)	HS+	2.01		C
V28	SIGRTN	ANA	1.03		P
V29	FPRC		3.05		O
V30	CTO		3.04		O
V31					
V32					
V33					
V34	GANWNT		6.01		O
V35					
V36	GENLI	2	1.13		I
V37	ENSI		1.04		I
V38	ECSI		1.10		I
V39					
V40					
V41					
V42					
V43	SIGRTN	ANA	1.03		P
V44	SMCS		3.06		O
V45	PTO_Relay		3.03		O
V46	PWRGND		1.02		P
V47	PWRGND		1.02		P
V48	EVAPSV		6.03		O
V49					
V50	GENLI	1	1.13		I
V51					
V52	FPM-FPDM	1	2.11		I
V53	SST (U/D)	U	3.02		I
V54					
V55					
V56	APP (1-2)	1	2.01		I
V57	FTPT		1.12		I
V58	MAFRTN		1.02		P
V59	TRQ_P		6.03		O
V60	PCMRC		1.07		O
V61	PWRGND		1.02		P
V62	PWRGND		1.02		P
V63					
V64	BCPIL		3.03		O
V65	SST (U/D)	D	3.02		I
V66					
V67					
V68	APP (1-2)	2	2.01		I
V69	ACPT		2.05		I
V70	FTPTREF	1	1.04		P
V71	LTCREF	B	2.03		P
V72	LTCRTN	B	1.04		P
V73	SIGRTN	DIG	1.03		P
V74	GENPRC	2	1.12		O
V75	VSOUT		3.01		O
V76	PWRGND		1.02		P
V77	PWRGND		1.02		P
V78	SMC		3.07		O
V79	VACC		2.06		O
V80					
V81					
V82	VREF	3	2.06		P
V83					
V84	AAT		1.06		I
V85					
V86	LTCREF	A	2.03		P
V87	LTCRTN	A	1.04		P
V88					
V89	AUXFC		1.01		O
V90	LCRY_TH		5.02		O